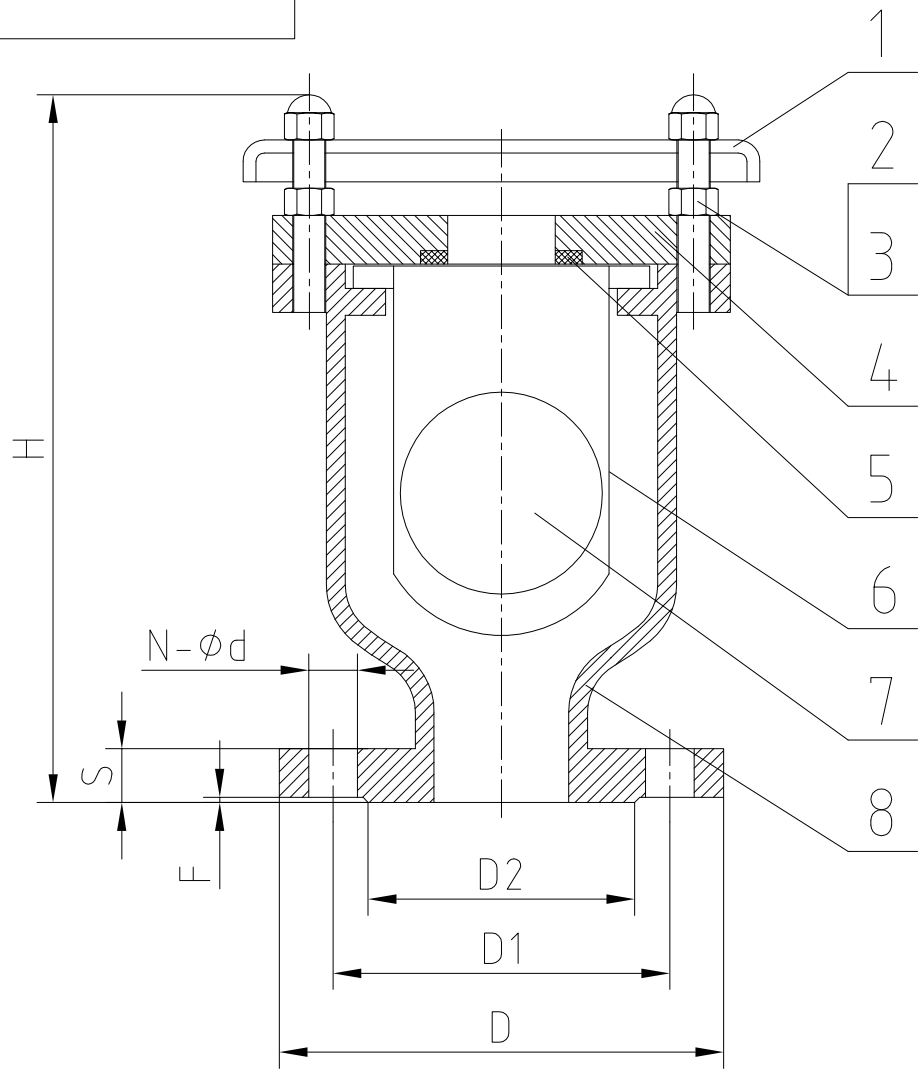

Technical Requirements

1. Height dimension (H) standard as to:MFR-STD
2. Design & Manufacture as to:ASME B31.3
3. Flange dimension conforms as to:ASME B16.5
4. Testing record as to:API 598
5. Pressure-temperature conforms as to: ASME B16.34
6. Material as per NACE MR-01-75(2002) requirement
7. Visual examination conforms as to: 100% MSS SP-55

Performance Standard		
Nominal Bore	2″～6″	NPS
Nominal Pressure	150	Lb
Pressure test		
Shell Test	3.0	MPa
Seal Test	2.2	
Backseat test	/	
Air Test	/	
Working Temperature	-29℃ ～ +120℃	
Suitable Medium	Water.Oil. etc	

NO.	Name	Material
1.	Cap	Duplex 2205
2.	Bolt	A193 Gr.B8M
3.	Nut	A194 Gr.8M
4.	Cover	A182 F51 (Duplex 2205)
5.	Seat	Viton
6.	Protective Bushing	Duplex 2205
7.	Floating ball	Duplex 2205
8.	Body	A890 4A (Duplex 2205)

SIZE / NPS	H	D	D1	D2	S	N-ød	F
2″	260	150	120.7	92	17.5	4-Ø19	2
2 1/2″	270	180	139.7	105	21	4-Ø19	2
3″	270	190	152.4	127	22.5	4-Ø19	2
4″	300	230	190.5	157	22.5	8-Ø19	2
6″	370	280	241.3	216	24	8-Ø22	2

1	Test		
1.1	Hydro Static Test	API 598	Yes
1.2	Working Pressure Test	API 598	Yes
1.3	Chemical composition certification	Mandatory	Yes
1.4	Working pressure test up to 435 PSI	Mandatory	Yes
1.5	Penetrant Test	Mandatory	Yes
1.6	Magnetic Particle Test	Mandatory	Yes
1.7	Maximum Working pressure on 435 PSI		Yes

Omega Model
Double Effect Air Valve

SBM PTV TM

Drawing No.:

2″～6″-150LB-RF
Duplex 2205 / Viton